Washkewicz College of Engineering

MARTINDALE ELECTRIC CO.

Automation of Indexing Feature on Undercutter Product Family

Gabrijela Uskokovic, John Schultz, Brian Squirek; Instructor: Mohammad S. Shirazi

Project Sponsor: Martindale Electric Company; Company Supervisor: Linas Biliunas

Department of Electrical and Computer Engineering, Washkewicz College of Engineering

Cleveland State University

After implementation of our design

Project Scope

Our project was the automation of an undercutter machine. The machine is used to cut slots into worn down commutators so they can be put back into service. Before our design was implemented, the HA-2 undercutter, the machine we worked on, had the operator manually align the blade to each individual slot and manually pull the saw down to complete the cut.

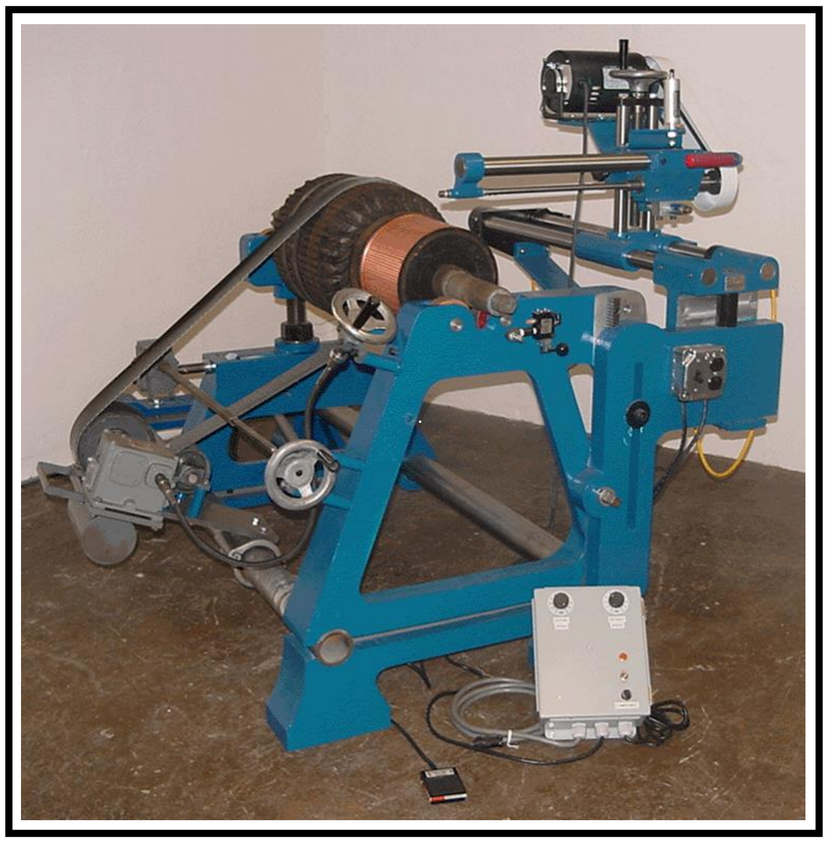

Before implementation of our design

Overall Design of System

The PLC/HMI is given information about the saw position. This information comes from sensors and signals placed on the machine. The saw up signal comes from a prox sensor that we added onto the saw. The slot midpoint detection comes from the camera. The index distance is determined by having the user make two manual cuts. The PLC then determines the distance the stepper motor must be turned and records the value. The stepper motor then turns that distance the next time and if the camera confirms the slot, the cut is made.

Design Overview

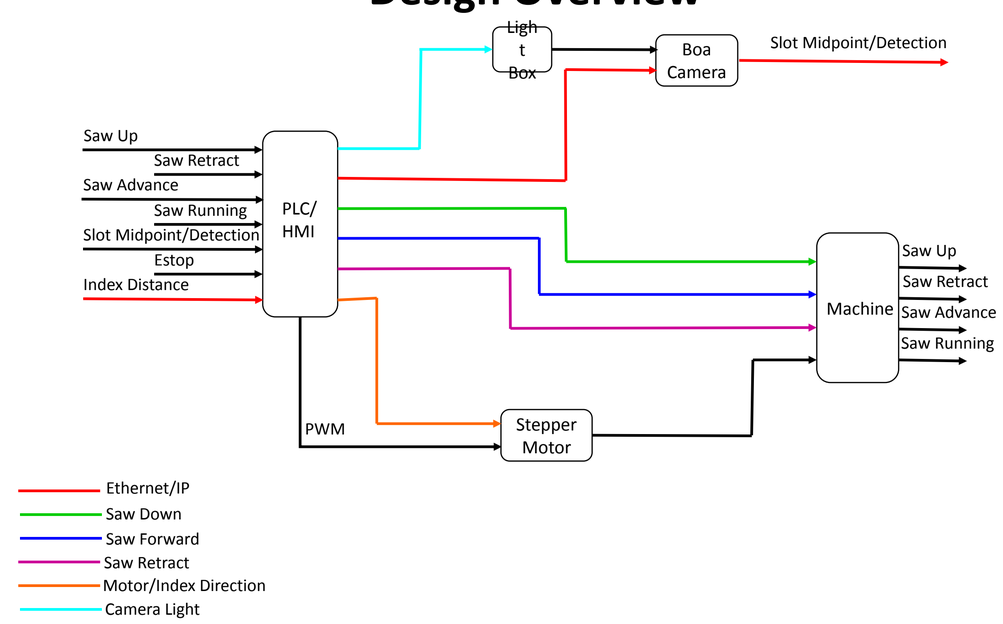

Program Flowchart

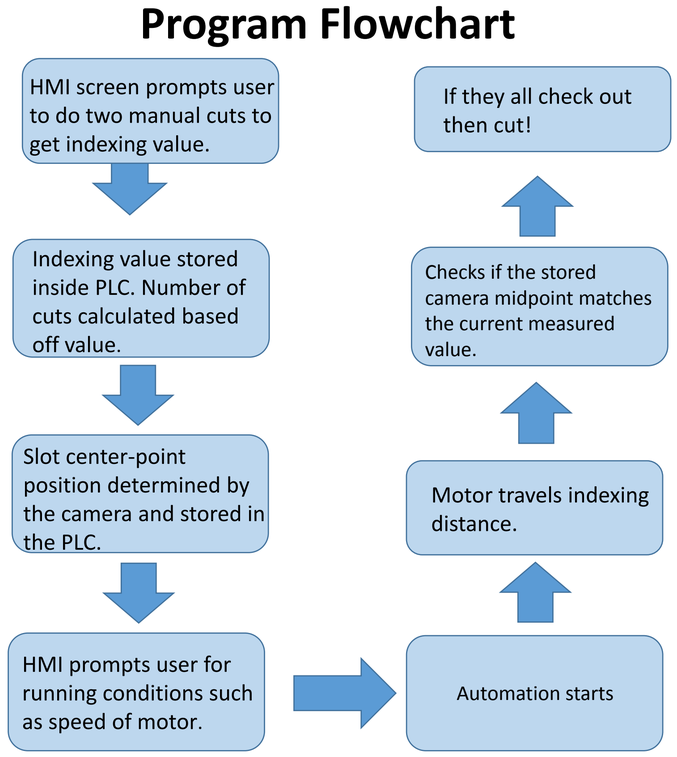

Slot Detection

The Teledyne Dalsa camera came with its own software to program the camera. The software provides a toolbox that we used to detect the slot's midpoint. We made a detection box and the software will automatically find the center point for us and send that value to the PLC through a Ethernet connection. This value is then used when the slot is being detected.