2015 EECS Summer Research
July 10, 2015

Session 1: Undergraduate research projects (Noon – 12:40pm)

Name	Advisor	Title
Abou-Bakar M Fofana & Connor Gordon	Zhao	An Integrated System for Privacy-Aware Human Motion Tracking with Real-time haptic feedback
Taylor A Barto	Simon	Regenerative Prosthesis
Michael C Iannicca & Brandon Rutledge	Simon	VEX IQ class Visual servoing with the NAO
Eric Payne*	Chu	Integrating an Android Device into an Embedded Computer System
Zhe Zhao*	Wang	Autonomous indoor surveillance robot system
Darius Bakunas-Milanowski	Sang	Parallel selection algorithms on GPGPU: Implementation and performance comparison

(*) Could not make it but the summary was available.

Session 2: Graduate research and education projects (12:40pm - 2pm)

Name	Advisor	Title
Yang Zhao*	Dong	Aerosol Jet 200 Final Design Project
Prasanth Babu Kandula	Dong	3D Electronics Printing in EEC 315/316
Mubin Ozan Onarcan	Fu	Design Patterns and Software Quality
Donald Ehima Ebeigbe	Simon	Hybrid Function Approximation Based Control
Gholamreza Khademi	Simon	Evolutionary Optimization of User Intent Recognition for Transfemoral Amputees Numerical Optimization of Robots with Energy Regeneration
Han Zhang	Gao	Permanent magnet synchronous motors (PMSM) control
Mohammed Ali	Alexander	Literature review on Active disturbance rejection control and Robotics control
Jiapeng Wang	Yau	
Anup Sam Mathew*	Yau	Acceleration of photosynthesis and respiration of Algae
Vahid Azimi	Simon	Robust Adaptive Impedance Control of a Prosthetic Leg Lettuce-Spinach Washing Estimation and Control
Seyed Fakoorian	Simon	State estimation for a prosthesis robot model
Farbod Rohani	Simon	Transfemoral Prosthesis with Energy Storage and Regeneration
Armin Rashvand	Simon	Exploratory Particle Swarm Optimization: Stability and Robot Control Tuning
Abhishek K Upadhyay	Stankovic	PWM boost type rectifier with extreme unbalanced condition and harmonics elimination operating at constant switching frequency

(*) Could not make it but the summary was available.

An Integrated System for Privacy-Aware Human Motion Tracking with Real-time haptic feedback

Student Researchers: Connor Gordon and Abou-Bakar Fofana

Faculty Advisor: Dr. Wenbing Zhao

The main goal of our project is to track consenting users in the Kinect sensor view while ignoring non-consenting users. We will then provide real-time haptic feedback to the consenting users based on their actions. We achieved this using a communication system consisting of a smartwatch, a smartphone and a server.

The smartwatch is responsible for checking constantly with the server and displaying messages to the user. The server is responsible for tracking the action of the users and generating message for the users. The phone acts as a bridge between the smartwatch and the server.

A user gives consent by going through a registration process, as shown in Figure 1. This process begins when the user presses a specific button on their smartwatch. When this button is pushed the smartwatch will send a message to the server (1) via the smartphone (2) saying that a user is attempting to register. The server then check all of the users within view of the Kinect sensor (3). If the server finds a user whose wrists are close together due to pushing the button, the server will register that user and will begin to track their movement. The server then sends a message to the watch (4) through the phone (5) saying that the user was successfully registered.

In addition, the smartwatch checks regularly with the server to see if there are any notifications to display to the user. These notifications are generated by the server when the user performs a safety violation. The notification contains information about the safety violation and how the user can avoid performing it again. Upon receiving the notification, the watch will display the notification and will vibrate to alert the user.

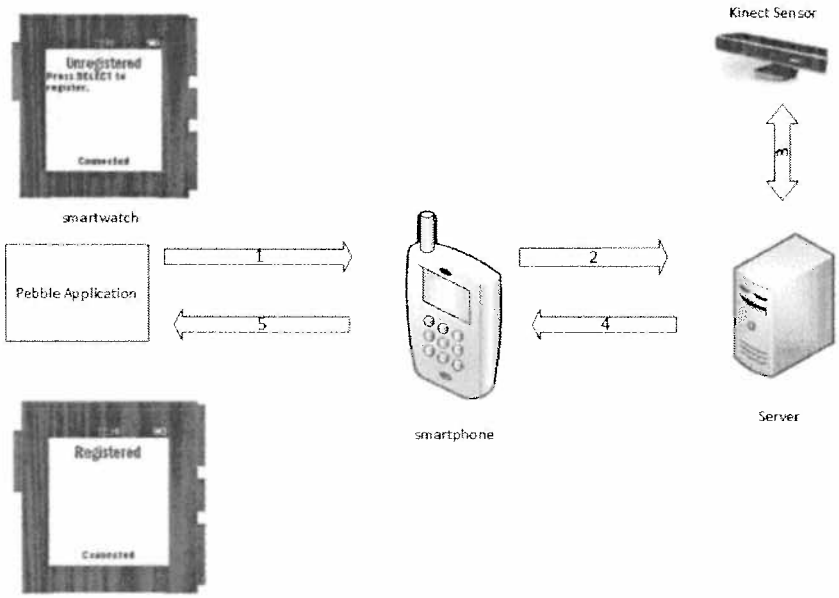

Figure 1: Registration process

Friday, July 10, 2015

Regenerative Prosthesis

Taylor Barto and Dan Simon

The regenerative research project aims to continue the trend of improving lower limb prosthetics. Historically, lower limb prosthetics contained no electronic control of elements used to assist in restoring proper gait. Current commercially available prosthetics include active and passive elements to assist a knee joint to move properly while the user places weight on the joint. Research at other institutions has added motors to assist the knee joints while the user is extending the knee joint. The research at Cleveland State aims to continue the trend of improving prosthetics further.

Our goal is to improve the operating time of the motorized prosthetics by introducing regenerative braking with supercapacitors to lower limbs prosthetics. Similar to a regenerative braking car, the Cleveland State prosthesis will assist a knee joint to move properly while the user places weight on the joint by storing the damped energy into a supercapacitor. The prosthesis will also assist a user's leg to move properly while the user is extending the knee joint by allowing the supercapacitor to power a knee motor.

Many students and faculty are working on this research with projects based on optimization, user intent recognition, mechanical design, and power electronics. Almost all of these tasks include a control system. My task for the prosthesis project involves simulating the power electronics.

Currently, a MATLAB simulation includes a modular state-space representation of a PWM voltage source converter that is being evaluated with two different controllers, PD and a neural network. The goal of the power electronics is to act in a manner similar to an AC transformer, allowing the motor and supercapacitors to efficiently transfer energy. Transforming the energy between the motor and supercapacitors is required because supercapacitors operate at low voltages and the knee motor requires a high voltage.

The system is optimized by two evolutionary algorithms, biogeography-based optimization and particle swarm optimization. The system is first tuned with biogeography-based optimization and then further tuned by particle swarm optimization. Particle swarm optimization was implemented in addition to biogeography-based optimization to improve converged results from biogeography-based optimization.

The PWM voltage source converter is being evaluated in detail in low-fidelity simulation of the prosthesis to compare control methods, different switching methods, and different hardware. The PWM voltage source converter is also being evaluated with a higher-fidelity simulation of the prosthesis which includes more mechanical design from other students who are involved in this research project.

To continue research in this subject, the PWM voltage source converter can be applied to other simulations that have been created by our research group. One example is to include the PWM voltage source converter at both the knee joint and ankle joint, which would allow for the transfer of energy between the knee and ankle.

Michael Iannicca
Brandon Rutledge
07/09/2015

Summer 2015 Undergraduate Robotics Research

We were assigned two projects this summer. The first was teaching a four day VEX IQ class and the second was visual servoing with the NAO. The former project would take about a month of preparation and the latter would take two months.

The VEX IQ class was held June 1-4 and ran for 6 hours each day. We were tasked with teaching the basics of programming, problems solving and robotics to middle school teachers. There were about fifteen teacher that participated. The class was hands on and consisted of a lot of programming problems and robot building.

The NAO project's goal is to create a program that will allow the NAO robot to control a VEX robot. The task that will be given to the NAO is to locate an object of a certain color, find its position relative to the VEX robot and guide the robot to the desired object. It will then pick up the object and move it to another location.

Firstly, a program has been written in ROBOTC that will take directions given, in binary button pushes, from the NAO using the controller in order for it to reach the object. The VEX robot was tested for rotational errors and translational errors in movement. The code was modified in order to minimize the errors as much as possible.

Second, software has been written in MATLAB that will input distance and orientation information of the robot relative to the block and output pre-recorded movements. The distance and orientation information is gathered using image processing algorithms.

An image taken by the NAO can be processed via MATLAB in order to locate the objects and their center points. Another program, using perspective projection, records the positions of the VEX IQ robot relative to the objects.

The controller needs to be modified to better suit the NAO, as it is difficult to get the NAO to use it as is. This will result in less positions the arms need to move to, taking less time. When using the computer vision, we need to find the orientation of the VEX robot, so the angle that it needs to turn in order to reach a certain point can be found. This is necessary when interacting with multiple objects.

Academic Advisor: Dr. Chu

Research topic: Integrating an Android Device into an Embedded Computer System

Student: Eric Payne

[redacted]

Introduction:

The proposed project is to utilize an inexpensive Android phone as a "universal programmable sensor module." This module can then be used to replace a dozen commonly used input devices for a computer system. The student portion of this project is to learn to program an Android device, research the specifications of the various sensors, link the Android device to the computer via Bluetooth, program the embedded microcontroller platform, and to research the interface specifications of the output actuators used in the experiment.

Current Status:

Currently, the Bluetooth connection has been established and the Android device communicates the information to the microcontroller in a list or array. Each index of the array is the value from a different sensor typically in the range of 0-255. Some of these values are normalized such as those from the accelerometer.

Work to Complete:

With the data being sent from the device complete, we need to still implement the output actuators. This will include several devices: matrix of LED's, tri-color LED, servomotors, and LCD readout (displays real time clock). Additionally, we need to make the data packet more robust by implementing byte stuffing.

Conclusion:

I have learned a good deal about the interface selected (MIT's App Inventor) and the microcontroller (Arduino UNO) during this project. I feel confident in my ability to complete the project's stated goals on time.

CSU Undergraduate Summer Research – Midterm Report

Zhe Zhao and Haodong Wang

July 8, 2015

1 Introduction

In this project, we develop an autonomous indoor surveillance robot system. Our robot software system is developed on top of Tekkotsu, a robot programming framework developed by Carnegie-Mellon University. This project is the continuation of the prior work and our goal is to design a more efficient path discovery solution and develop an obstacle avoidance mechanism.

2 Accomplishments

- Updated old version of Tekkotsu and OS: Previous project was built on Tekkotsu 5.03 and Ubuntu 12.04 (Linux). It is no longer supported for robots equipment which is necessary to run the project. Also, the latest version of tekkotsu requires certain new installations to compile. We completed majority of environment, including update jdk-7, Kernel, OS, Tekkotsu 5.04 etc.
- Port the former project code to the new platform: With new platform and configuration, we had to re-compile our previous project on the new platform.
- Debugging and troubleshooting: We spent tremendous amount of time in this section. With new updated platform, the project code was not able to compile. We had to identify the causes, reconfigure the new setting and patching old project for it to work.
- Study the Tekkotsu framework and its programming: Tekkotsu is an open source framework supporting software development for a variety of robotic platforms. For continuous development of our project, We learned to use functions provided by the platform that is needed in our project, including general architecture of the framework, creating behaviors, event handling, build our own state machine, motion command, vision process etc.
- Explore a way to enhance the navigation performance (less computational overhead, low latency) by using Tekkotsu built-in image process library instead of opencv: Since previous project is heavily rely on outside source functionality(OpenCV) to handle the vision process of the robot, we believe that it enormously slows down the processing speed, and consume large amount of resources to support it. With our group discussion, we found a method to accomplish same or even better achievement with Tekkotsu build-in image process function.
- First stage image process test is acceptable: We had tested vision process by using Tekkotsu. The result is acceptable. It can accurately react to shape data type, but the result from color process is problematic.

3 To Be Finished by August 2015

- Fix color process and create unique reference for robot to identify. At the current stage, without accurate color process, it is impossible to create unique reference for robot to follow. So the color issue has to fix ASAP.

- Create our own state machine for robot to interact with its surrounding environment. How robot interacts with its environment entirely depends on state machine. After vision process producing desirable result, we will build a simple state machine to let robot search for its reference and interact with it.
- Upgrade State machine: Generally speaking, we will attempt to consider every scenario that is possibly occur during robots activities and build nodes to handle each scenario. Such as, losing sight of reference, hitting object in mid of its activity etc.

Parallel Selection Algorithms on GPUs:

Implementation and Performance Comparison

Darius Bakunas-Milanowski and Janche Sang
Dept. of Electrical Engineering and Computer Science
Cleveland State University

Introduction

In the past few years, modern Graphics Processing Units (GPUs) have been increasingly used together with CPUs to accelerate a broad array of scientific computations in so-called *heterogeneous computing*. It is now much more convenient to create application software that will run on current GPUs, without the need to write low-level assembly language code. CUDA®, a parallel computing platform and programming model invented by NVIDIA, "enables dramatic increases in computing performance by harnessing the power of the graphics processing unit." In this project, we will focus on studying different parallel selection algorithms, their implementation and performance optimization on CUDA-enabled GPUs.

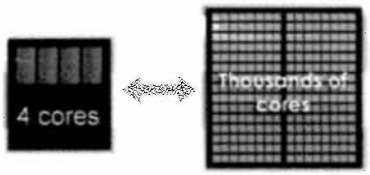

Research

Given a massively large array of elements, we are interested in how we can use a GPU to efficiently select those elements that meet the requirement and then store them into a target array for further processing. The key point is determining the indices of the selected elements in the destination array. Two possible approaches for doing this include using an atomic CUDA operation `atomicInc()` to increment an index counter for each newly selected element (Figure 1), or implementing the list ranking algorithm with the parallel prefix sum operation.

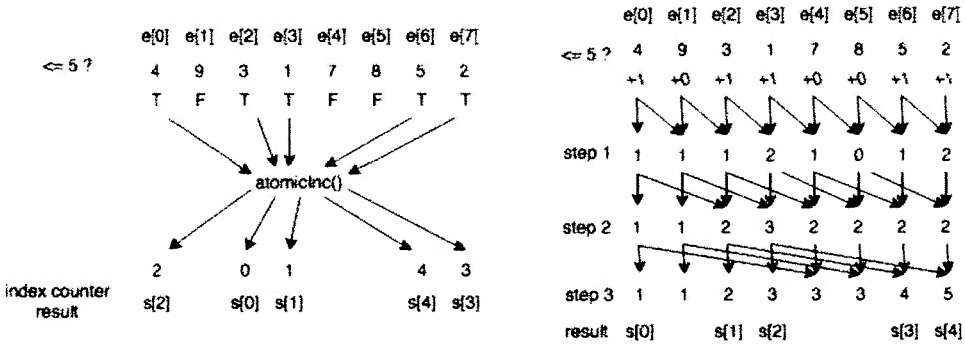

Figure 1: Selection of data elements using (a) atomicInc (b) list ranking

There are many possible ways to optimize these algorithms. Gaining a good understanding of underlying architecture and conducting the performance experiments will allow us to investigate the strengths and weaknesses of these algorithms. We plan to submit our implementation experiences and performance comparison results to a conference/workshop for possible publication. The code for parallel selection methods developed in this project will be put in the public domain for free access. Other researchers in academia and industry can benefit from the library code to speed up the execution of their GPU programs.

July 2015 Yang Zhao

EEC 312 Electric Circuit Lab

Aerosol Jet 200 Final Design Project

My responsibility of the summer research is conducting course projects for EEC 312 the Electric Circuit Lab based on the Aerosol Jet 200 (AJ200) printing technology. AJ200 printing technology is the three-dimensional printing for electronics, which is a promising manufacturing tool that can solve many problems. We have received requirements from the industry for the printing of cell-phone antenna, circuitry inside of credit cards, circuitry of the wearable devices, and etc. It is necessary to teach our undergraduate students the AJ200 technology, so that they can develop an early concept for printing of electronics.

I designed three course projects for the fall semester, and they are the Power in DC Circuits (based on Lab 5), the Voltage Divider (based on Lab 7), and the Circuit Ground (based on Lab 8). These are fundamental course projects that are easy to understand and perform. For all three projects, we build a series circuit of resistors and LEDs, so we can make measurements and observe the change of voltages and currents. We can make small changes to each project (the resistance, circuit layout, and etc.), so that each group has their unique project assignment. The sample experimental data indicate that these printed circuits work well as the traditional circuits.

I plan to teach the undergraduate students the AJ200 technology using the following methods. Firstly, I offer short lectures about the basic concept of electronic printing. Then, I train the students to operate the AJ200 printers to print lines manually. And finally, I teach the students design the CAD files to print circuits automatically.

I plan to continue work on the course projects for the fall semester. Firstly, I prepare PPT slides for the lectures. Secondly, I prepare simple pre-lab (or post-lab) questions for the students to remember the important materials. Finally, I further revise the course schedule if necessary.

Prasanth Babu Kandula

Summer Project 3D Electronics Printing: AJ 200 In EEC 315/316

- Modified the lab course work to incorporate the 3D printing (weekly plan).
- Listed out tools and equipment necessary for incorporating 3D printing in lab courses EEC 312, EEC 315 and EEC316.
- Assisted in acquiring vendor information and quotes for all the required equipment.
- Tested different kinds of printing scenarios and finalized on which one will work to teach in next semester.
- Every day testing involves maintaining of the equipment.
- Prepared an Op-amp inverting circuit using AJ200 and glued a gull wing op-amp to complete the circuit. Tested it.
- Used dielectric tape as an insulating layer for crossovers.
- Attended 3D printers EXPO in Tri-C
- Demonstrated Demos of the Aerosol Jet printing technology to visitors of the lab.
- Attended Cubbison Electronics printing company to get an exposure of in production printing.
- Went to American Printers facility at Youngstown to gain knowledge of different techniques of 3D Printing (polymer and metal).
- Prepared power point slides for next semester lab course.

To do list for rest of the summer:

- Complete the remaining presentation slides for course.
- Give demos to visitors of the lab.
- Find out the required tools and equipment as we keep on doing experiments with different inks and techniques.
- Use Di-electric ink as an insulator layer instead of kapton tape.
- Use Resistive ink for resistance instead of gluing resistors to substrate.

Student: Mubin Ozan Onarcan

Advisor: Dr., Yongjian Fu

Design Patterns and Software Quality

Design patterns are object oriented software design practices for solving common design problems and they affect software quality. We investigate the relationship of design patterns and software defects in 26 open source Java software projects. Design patterns are extracted from the source code repository of these open source software projects (CVS, SVN, and Git). Software defect data are extracted from the bug tracking systems of these projects (Allura, Bugzilla, JIRA, Launchpad, and Sourceforge). Design patterns under study Factory Method, Singleton, Prototype, Adapter, Composite, Decorator, Proxy, Observer, State, Strategy, Template Method, and Visitor.

Using correlation and regression analysis on extracted data, we examine the relationship between design patterns and software defects. Our findings indicate that there is little correlation between the total number of design pattern instances and the number of defects. However, our regression analysis reveals that individual design patterns as a group have strong influences on the number of defects. Especially, Object-Adapter-Command, Observer, State-Strategy, Template Method, and Proxy patterns have significant impact on the number of defects.

Beginning of the summer we performed bibliographic search to find out if there are any other studies published recently related to design patterns and software quality. We found some papers published recently, but there are not in the same depth and they are in specific areas. Our previous study performed on only one version of the open source software projects. We investigate the relationship between design patterns and software quality on project level and design pattern instances level. Now we are expanding our research and we will study the individual design pattern classes and software defects over the lifetime of the software projects. We will collect and analyze data from annual snapshots of each software projects under study.

Title: Hybrid Function Approximation Based Control

By: Donald Ebeigbe Date: 7/7/2015

My summer research began with an in-depth study into my recent research topic which is to design and simulate a controller for implementation on a prosthesis test robot. My design makes use of two popular control techniques: the regressor-based control method and the regressor-free control method. These controllers are coupled together to give a new hybrid controller that is intended to give reliable efficient control of the prosthesis test robot by making sure the reference trajectories from human walking data courtesy of the United States Department of Veterans Affairs (VA) are closely followed by the joints.

The regressor-based control technique is the Slotine and Li's adaptive controller which makes use of a regressor matrix, has no direct dependence on joint acceleration, and does not invert the inertia matrix during implementation. The regressor-free control technique is the Function Approximation Technique (FAT) based adaptive controller which eliminates the need for the regressor matrix and makes use of a finite linear combination of orthonormal basis functions to represent estimates of the inertia, Coriolis, and gravity matrices in its control implementation. The stability of the resulting hybrid controller is verified by proper selection of a candidate Lyapunov function and update laws to prove that the tracking error goes to zero as time goes to infinity.

Furthermore, several computer simulations were performed on the proposed controller by implementing it on a 3 DOF prosthesis test robot: the first two links emulate the vertical hip motion of a human and the angular thigh motion of a human while the third link emulates the angular knee motion of the human leg. Several tuning parameters such as the number of basis functions, the type of basis functions, the controller gains, the adaptation gains, and the σ modification terms were changed to observe the controllers performance and to determine under what conditions the controller gives the best performance.

I also worked in parallel by writing an academic paper titled "**Hybrid Function Approximation Based Control with Application to Prosthetic Legs**". I worked on the paper by detailing the development of my new controller, its stability proof, computer tests and simulations, and other content deemed valuable towards the understanding of my research by an academic society. The paper is in its completion stage, and pending its approval by my supervisor, Dr. Dan Simon, it is my intention to submit the paper for publication in a journal/conference.

My future research this summer will be to investigate the implementation of impedance control and ways in which the target impedance can be updated via means of an outer control loop and some sort of adaptation law.

Cleveland State University
Electrical Engineering and Computer Science Department

Summary of Summer Research

Gholamreza Khademi
Email: khademi.gh@gmail.com
Office Location: Fenn Hall, 3rd Floor, Room 312A

Supervisor: Professor Dan Simon

1. Evolutionary Optimization of User Intent Recognition for Transfemoral Amputees

Lower-limb prosthetic legs help amputees regain their walking ability. User intent recognition is utilized to infer human gait mode (fast walk, slow walk, etc.) so the controller can be adjusted depending on the detected gait mode. In this research, mechanical sensor data is collected from an able-bodied subject and used for user intent recognition. Feature extraction, principal component analysis, correlation analysis, and K-nearest neighbor methods are used, modified, and optimized with an evolutionary algorithm for improved performance. The system successfully classifies four different walking modes with an accuracy of 96%.

2. Numerical Optimization of Robots with Energy Regeneration

In this study, CCF robot with regenerative electronics and a tracking controller for the hip and thigh and an impedance controller for the knee is simulated. It is assumed that hip and thigh are active joints, while knee is a semiactive joint. The virtual controller is based on passivity based control. Force cancellation is used for the upper joints. However, for the knee, the force is not cancelled and is handled by the impedance controller. In fact, external force can have a positive influence in energy regeneration, although it degrades tracking accuracy. As target impedance changes, tracking and energy recovery change in opposite ways. Multi-objective optimization is utilized to obtain a tradeoff between tracking and energy regeneration.

Summer Research Summery Han Zhang

Permanent magnet synchronous motors (PMSM) are widely used, where the torque control is critical.

- Torque output accuracy
- Energy efficiency

There are two key problems in PMSM control that are still not fully addressed

- The direct axis current and the quadrature axis current are strongly coupled in the existing field oriented control (FOC) configuration;
- The phase imbalance due to the asymmetric load has critical impact to PMSM, but is rarely addressed in research.

ADRC based current controller will be designed and implemented.

Steps in the research:

1. Simulation with MATLAB SimElectronics Toolbox
2. Use dSpace as the controller and do hardware test
3. Implement and test the controller with Texas Instruments DSP

Problem 1: the switching noise of the high voltage and high current motor driver module got into the current feedback signal and made the feedback very noisy since the controller is constructed with modules.

Solution 1:

- Make a printed circuit board (PCB) and put all the circuit together
- Use 4 layer board and insolate all the analog signals in the inner layer
- Use fully differential op-amp to make full use of the dynamic range of the ADC
- Use high power supply rejection ratio (PSRR) linear regulator (LDO) to filter out the switching noise from switching mode DC-DC convectors

Result: the noise is reduced by 10 times, but the ground rail and power rail still have some ripple from the DC-DC convertors

Problem 2: The power rail and ground rail still have some ripple from the DC-DC convertors

Solution 2:

Use a RLC filter after the DC-DC convertors output, Failed.

Replace the DC-DC convertors with fully linear power supply solutions, use transformer and LDO.6

Mohammed Ali

Literature review in Active Disturbance Rejection Control & Robotics Control

- Have been reading papers about Active Disturbance Rejection Control
- Have been reading papers about robot control
- Simulated Dr. Gao's work in his paper "*Scaling and Bandwidth-Parameterization Based Controller Tuning*"
- Reading a master thesis named "*ROBOTICS CONTROL USING ACTIVE DISTURBANCE REJECTION CONTROL*" by Dr. Alexander's former student
- Developed the forward kinematics of different multilink manipulators using the Denavit-Hartenberg (DH) convention
- Developed the Jacobian matrices for different multilink manipulators by calculating the linear velocity and angular velocity for each joint in the manipulator
- Developing the dynamics of the multilink manipulators using the Euler Lagrange equation.

To do list for the rest of summer

- Finish reading the thesis by Dr. Alexander's former student
- Finish developing the Euler Lagrange equations for the multilink manipulators
- To simulate the work done in the thesis

Summary of summer research work and future Prospects

My summer work could be summarized as below:

1. By the end of the last academic semester, I have started working on a project – acceleration of photosynthesis and respiration of Algae; there by accelerating its total growth. The work is still going on, we couldn't get any positive results yet.

2. I have been given training on design and development of immunoglobulin sensor. This is basic sensor development training. This method of sensor development could be applied to other sensor development projects. As a next step, I would be given training in Ecoli sensor development project.

3. A new ELISA machine has been purchased for our lab, which would be installed 7/9/2015. The company would be giving us training to use the machine.

4. In addition to all the above projects, I was helping undergraduate students for developing circuit for glucose sensor.

The plan of work for later summer

1. Second phase of sensor training, which I would be trained to develop an ECOLI sensor.

2. Algae project would be taken ahead- and all possibilities of getting a positive result would be tried.

3. We would be trained on the ELISA machine uses and applications.

4. I would start working on a new project, by this summer

ANUP Mathew

Summer Research

Vahid Azimi, email: v.azimi@csuohio.edu

07/07/15

1. Robust Adaptive Impedance Control of a Prosthetic Leg

About two-million people in the US have lost a limb. The most common types of amputation are transtibial (below the knee) and transfemoral (above the knee). In these cases prosthetic legs can provide normal walking for amputees. We are working on a robust bounded-gain forgetting composite adaptive impedance controller for a 3-DOF active prosthetic leg for transfemoral amputees (see Fig. 1). We use composite adaptation, which drives the parameter adaptation using both tracking and prediction errors on the joint torques to estimate the uncertain parameters of the system. We also use a robust control term so the system trajectories converge to a sliding manifold and exhibit robustness to variations of ground forces. We also prove the stability of the system with Lyapunov theory and Barbalat's lemma. We will present simulation results to compare the controller to robust tracking-error-based adaptive control. In addition, we are trying to include the rotary and linear actuator dynamics in the control method.

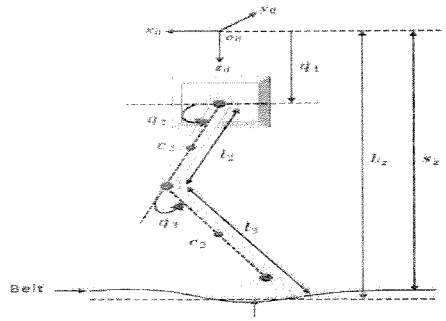

Fig. 1. The prosthetic leg

2. Lettuce-Spinach Washing Estimation and Control

Produce washing is an essential step to remove dirt and pathogen contamination. As a specific case, we focus on a process for washing a mixture of lettuce and spinach (see Fig. 2). Concentrated sodium hypochlorite is manually added to the primary wash tank. T128 or citric acid is then added to the wash tank via an automated controller. Finally, water, lettuce, and spinach samples are periodically moved from the upper water level in the primary wash tank to the secondary one. We aim to estimate the states of this nonlinear washing process using an extended kalman filter (EKF). We are also trying to optimize some system parameters via evolutionary optimization to get a good fit between the system model and exprimental data. Eventually, we are going to design a robust adaptive controller to get good tracking performance for control objectives such as pathogen and colorine concentration in the presence of system uncertainties and disturbances.

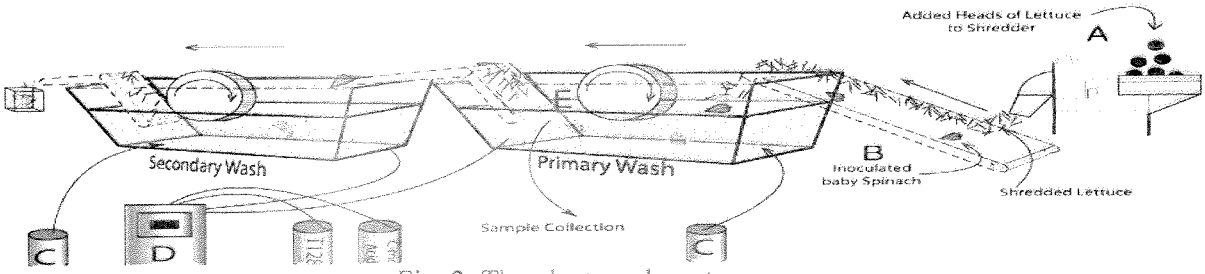

Fig. 2. The plant wash system

July 10 2015

State Estimation for a Prosthetic Robot Model

Seyed.A.Fakoorian

This summer, I have been trying to design an estimator for state of a prosthesis robot model and estimate ground reaction forces. The main property of this estimator is robustness in system parameter uncertainties, disturbances, and initial estimation errors. For this purpose, we first used a derivative-free Kalman filter (DKF). In this approach, the system is first subject to a linearization transformation, and next state estimation is performed by applying the standard Kalman filter to the linearized model. Since DKF is based on feedback linearization control for the linearization transformation, we proposed a new method which is a combination of sliding mode and feedback linearization controls. Thus, we can make the controller more robust to system parameter uncertainties; as a result, we can have robust state estimation in the DKF. Unlike the extended Kalman filter (EKF), the DKF provides estimates of the state of the nonlinear system without taking derivatives and without Jacobian calculations. Therefore, the problems of the EKF which come from the local linearization of the nonlinear systems by using a first-order Taylor expansion can be avoided in the DKF. These problems in the EKF may affect the accuracy of the sate estimation and consequently the stability of the state estimation-based control loop, and are alleviated with the DKF.

There are some limitations to applying the DKF. First of all, a nonlinear system should satisfy necessary and sufficient conditions to transform the system to observer canonical form. Secondly, we should only use feedback linearization as a control loop for the nonlinear system. The controller's objective is a linearization transformation to obtain observer canonical form to apply the standard Kalman filter for state estimation. It is obvious that feedback linearization control is not robust to system parameter changes from their nominal values. Since the stability of the estimator is dependent on the boundedness of the feedback linearization controller, we should focus on the robustness of the controller. We are still considering the possibility of applying the DKF to the prosthetic robot in order to have more robust state estimation.

Beyond the prosthesis leg project, I have been studying the unknown input extended Kalman filter and I am writing a new proposal called "Model parameter estimation with unknown input Kalman filtering." In this project the model matrices from the given state space equation are estimated along with the state.

Transfemoral Prosthesis with Energy Storage and Regeneration

Farbod Rohani
Advisor: Dr. San Simon
07/07/2015

I am working on energy regeneration for an above-knee active prosthesis with energy storage and regeneration. A DC motor-generator applies a positive or negative torque to the knee and ankle which is based on a model developed by Dr. Richter. The goal of this project is to develop an energy regeneration above-knee prosthetic system.

The inputs of the system are the knee torque and the ankle torque which are obtained from Cleveland Clinic data. This data is applied to the ankle and knee joints. Mechanical energy can be stored or released by connecting a spring to the shaft. In order to charge the ultra capacitor which is used between knee and ankle, the generator produces voltage across the input of the transformers. A torque generated by a transmission shaft is applied to the armature to run the generator.

One of the milestones in this project is using very accurate numerical methods for simulating this system in Matlab. We tried different numerical methods for differentiation and integration, however, there are still some errors in the simulation output which I believe arise from numerical problems in Matlab.

Also particle swarm optimization, which is an evolutionary algorithm, will be used to optimize the system parameters, and then evaluate its performance with Simulink® models.

Exploratory Particle Swarm Optimization: Stability and Robot Control Tuning

Summer 2015

Armin Rashvand armin.rashvand@gmail.com [redacted]

The goal of this research is to propose, implement, and analyze a new particle swarm optimization (PSO) algorithm with enhanced exploration, which we refer to as exploratory particle swarm optimization (ExPSO). We use the PSO and ExPSO algorithms to optimize tuning parameters for a passivity-based impedance controller on a hip robot simulation model which is used for testing a prosthetic leg. ExPSO has features in common with negative reinforcement particle swarm optimization (NPSO); both algorithms use not only individuals' successes but also their mistakes, to modify individual velocities in the search space. NPSO uses mistakes to prevent repeating such mistakes, but ExPSO uses mistakes to increase exploration. The 2005 Congress on Evolutionary Computation (CEC 2005) benchmark problems were used to evaluate the performance and parameter selection of PSO and ExPSO. We find that ExPSO can find optimum solutions better and faster than PSO and NPSO, especially for high-dimensional and difficult problems. Additionally, mathematical convergence analysis conditions for ExPSO are derived.

PWM BOOST TYPE RECTIFIER WITH EXTREME UNBALANCED CONDITION AND HARMONICS ELIMINATION OPERATING AT CONSTANT SWITCHING FREQUENCY

PWM boost type rectifier is very common and vital device to power industry. It converts three phase AC supply to DC. As in present era most type of electrical loads we are using are DC in nature except for AC Motors, heaters and lighting loads. But the most important usage for this rectifier is that it is used as converter module for renewable energy source such wind energy etc. As we know generally renewable energy sources are variable in nature and hence AC power generated by them cannot be used directly to run electrical loads. Hence, it is generally converted and then inverted in order to maintain the power quality of the electrical supply.

The problem with this device is that it operates at low displacement power factor which leads to generation of excessive reactive power on the AC side. Also, it causes lot of power line pollution in the AC side for example line current distortions, EM interference etc. This problem is amplified when the power generating source is variable in nature.

In previous research project done by Mr. K Chen and Dr. Ana Stankovic, they successfully implemented an algorithm which makes this rectifier to operate at unity power factor and eliminates the line distortion caused by the switching under extreme unbalanced condition. But, it has one disadvantage the switching frequency of this controller which is a "Hysteresis Controller" does not remain at a certain value. And high order harmonics are spread all across the spectrum particularly when operating in extreme unbalanced condition. My work here is to make the switching frequency of the PWM boost rectifier constant.

I have already completed my theoretical and simulation model of this project. I have created an algorithm which used a research paper presented by Mr. Johann W. Kolar and his colleagues on how to make the switching frequency constant for an inverter system in balanced condition for the device. The device successfully operates in unbalanced condition with this approach giving constant switching frequency. Here I have used variable hysteresis controller to achieve this result. The simulation model is developed using MATLAB/Simulink Simpower system toolbox.

I am working on my experimental verification of the theoretical and simulation result. For this, I am using dSpace with MATLAB/Simulink real time implementation toolbox. I have already developed real time operating model for the experimental verification. Presently, I am working on achieving the results in balanced case condition and further going on to implement the same with unbalanced cases involved in our research project.

Abhishek Upadhay